模拟IC设计进阶
课 程 内 容

主讲人：Chris

目录

一、低功耗蓝牙（BLE）Transceiver系统结构

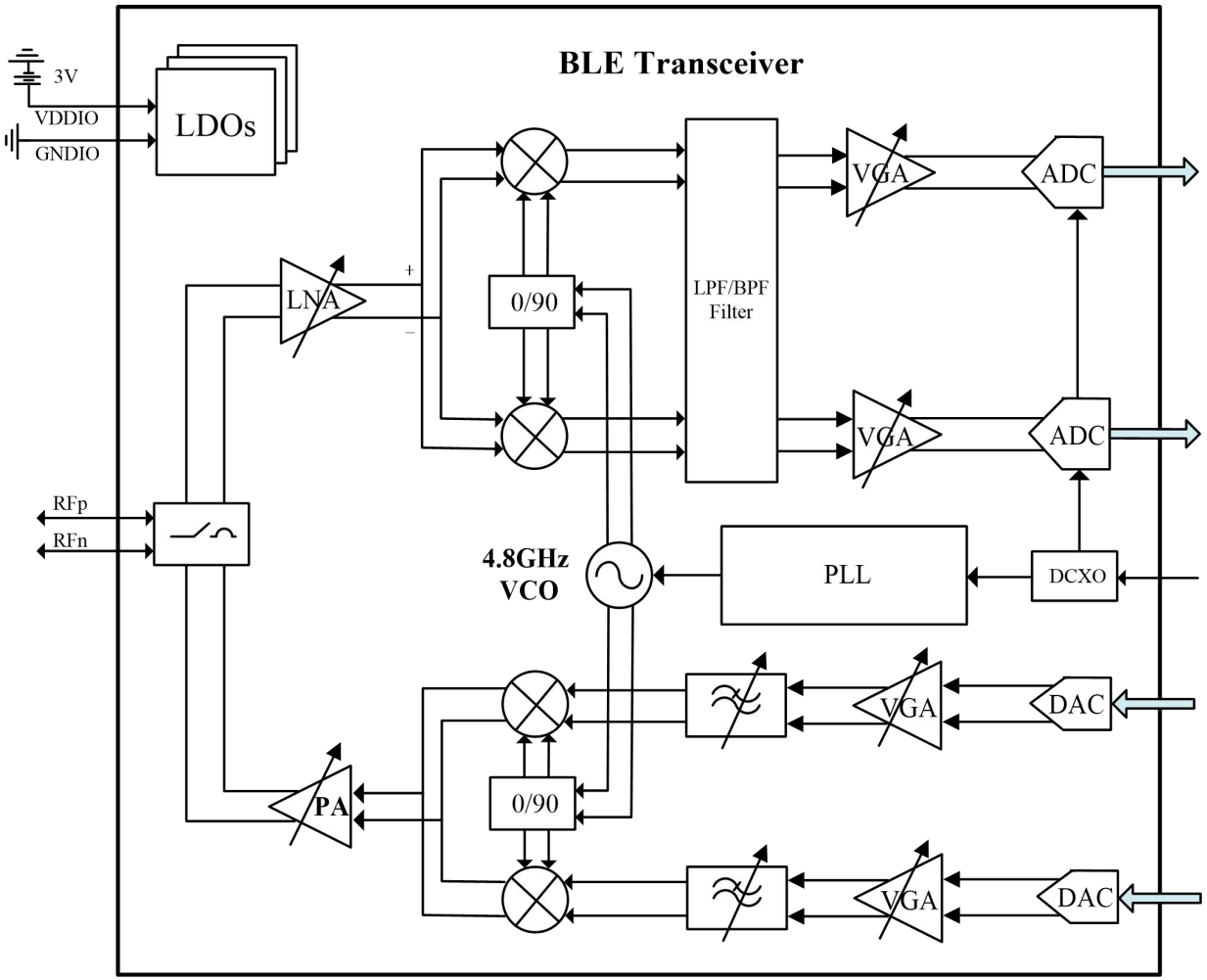

一、低功耗蓝牙（BLE）Transceiver系统结构

PARAMETER	MIN.	TARGET	MAX.	UNIT	TEST CONDITIONS
RF input frequency range	2402		2480	MHz	
LE Transmitter					
Output RF max power		4		dBm	
RF control range		24		dB	
Coarse gain step		3		dB	
Fine gian step		0.5		dB	
Gain variations	-3		+3	dB	Vs. Process, voltage, temperature
In-band spurious emissions 2MHz			-20	dBm	
In-band spurious emissions, 3MHz or greater			-30	dBm	Standard Measurements conditions[2]
LE Receiver					
Receiver Sensitivity		-84		dBm	BER <= 0.1%
Max usable signal	-10			dBm	BER < 0.1%
Co-channel selectivity			21	dB	
Adjacent channel selectivity 1MHz			15	dB	
Adjacent channel selectivity 2MHz			-17	dB	
Adjacent channel selectivity 3MHz			-27	dB	
Image frequency			-9	dB	
Adjacent (1MHz) interference to image			-15	dB	
Out-of-band blocking < 2GHz			-30	dBm	Standard Measurement conditions[2]
2.399 – 2.4GHz			-35	dBm	
2.484 – 3.0GHz			-35	dBm	
3.0 – 12.75GHz			-30	dBm	

二、 CMOS工艺有源及无源器件介绍

- MOS晶体管、BJT、电阻、电容、电感等

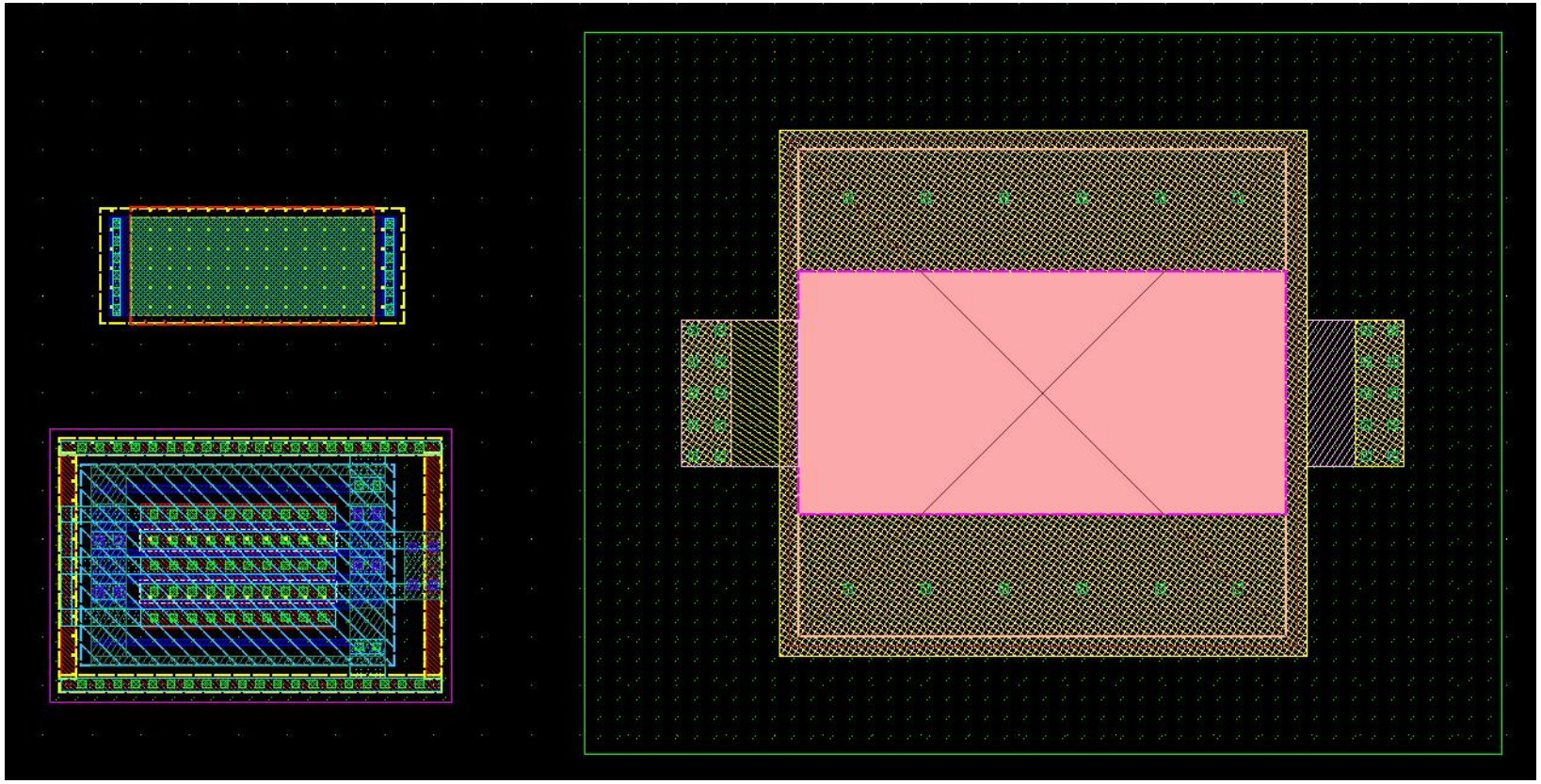

三、 gm/Id设计方法介绍及曲线仿真

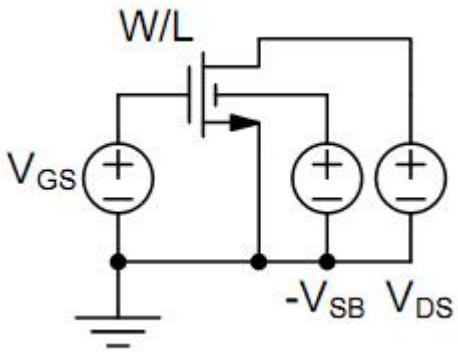

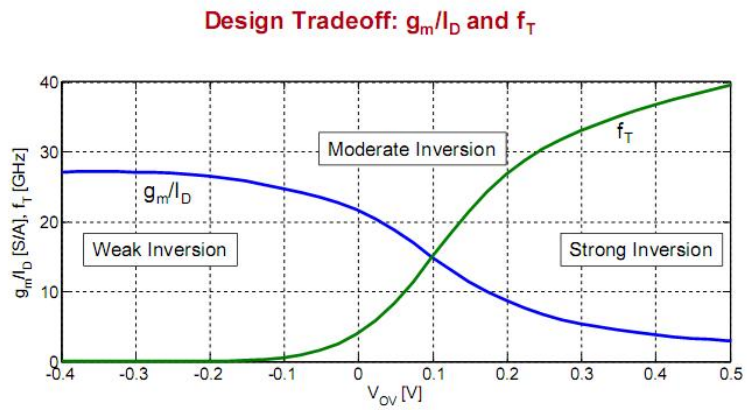

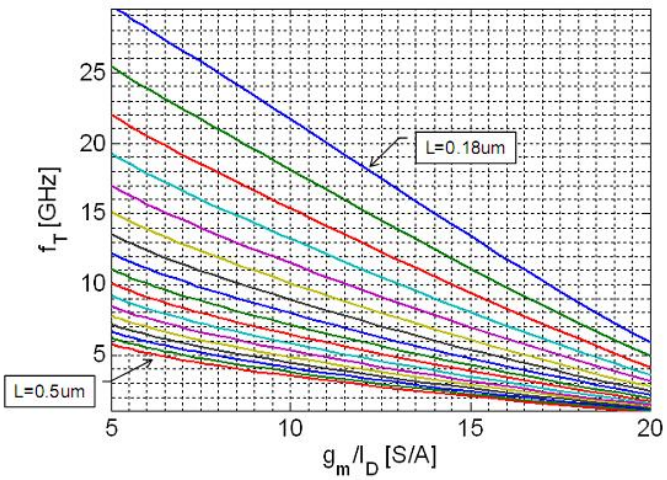

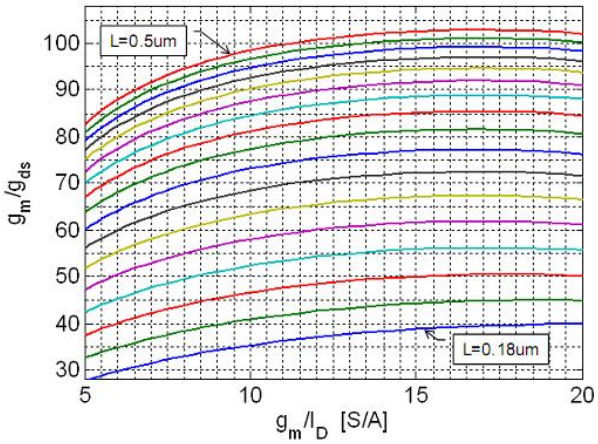

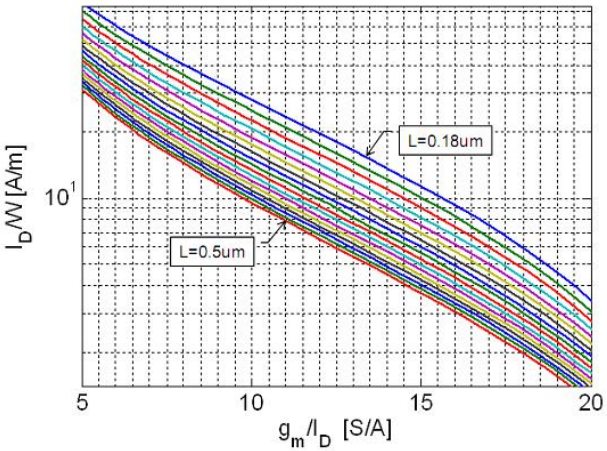

四、 Bandgap电路仿真及版图设计

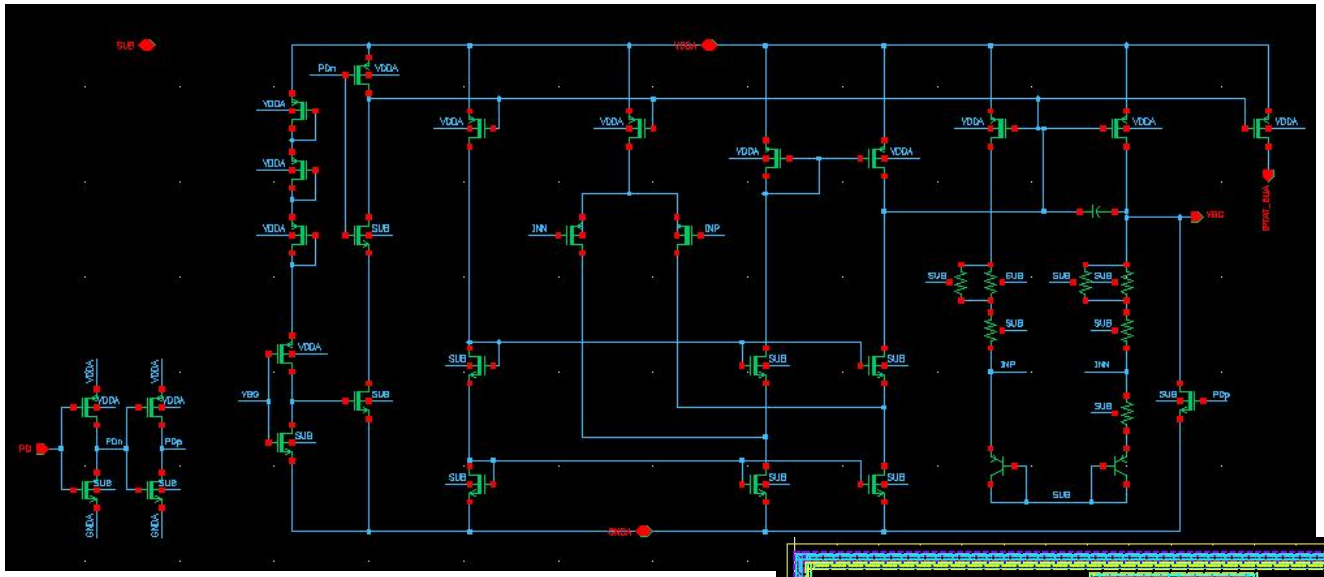

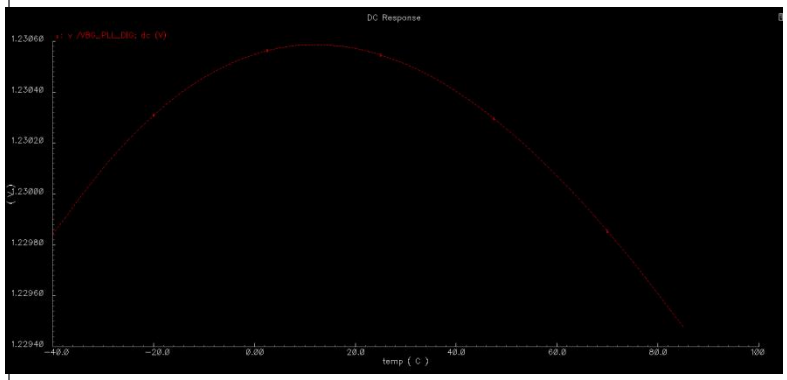

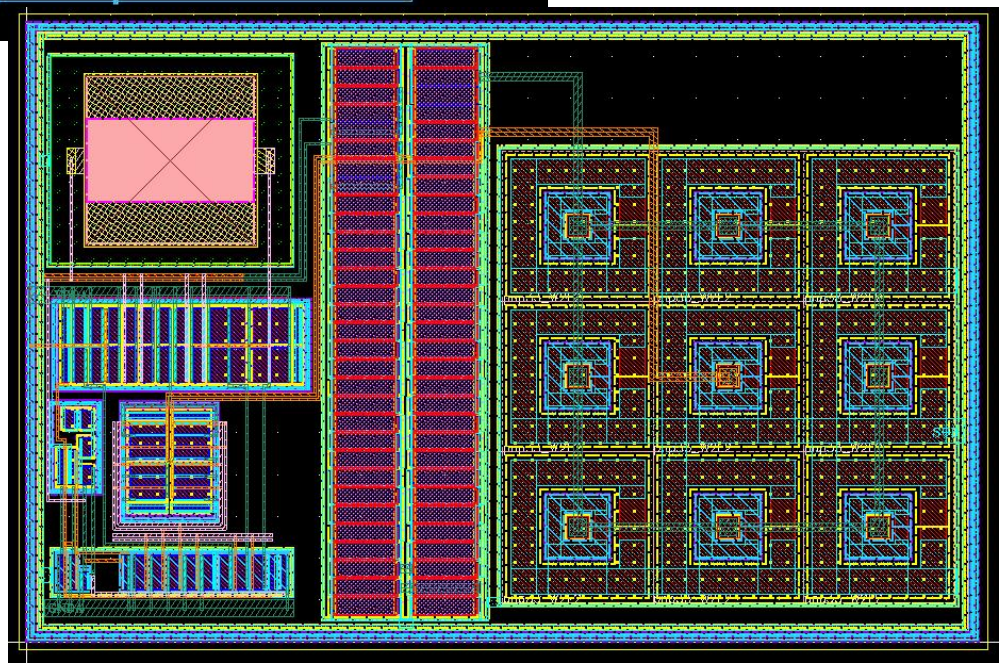

五、 LDO电路仿真及版图设计

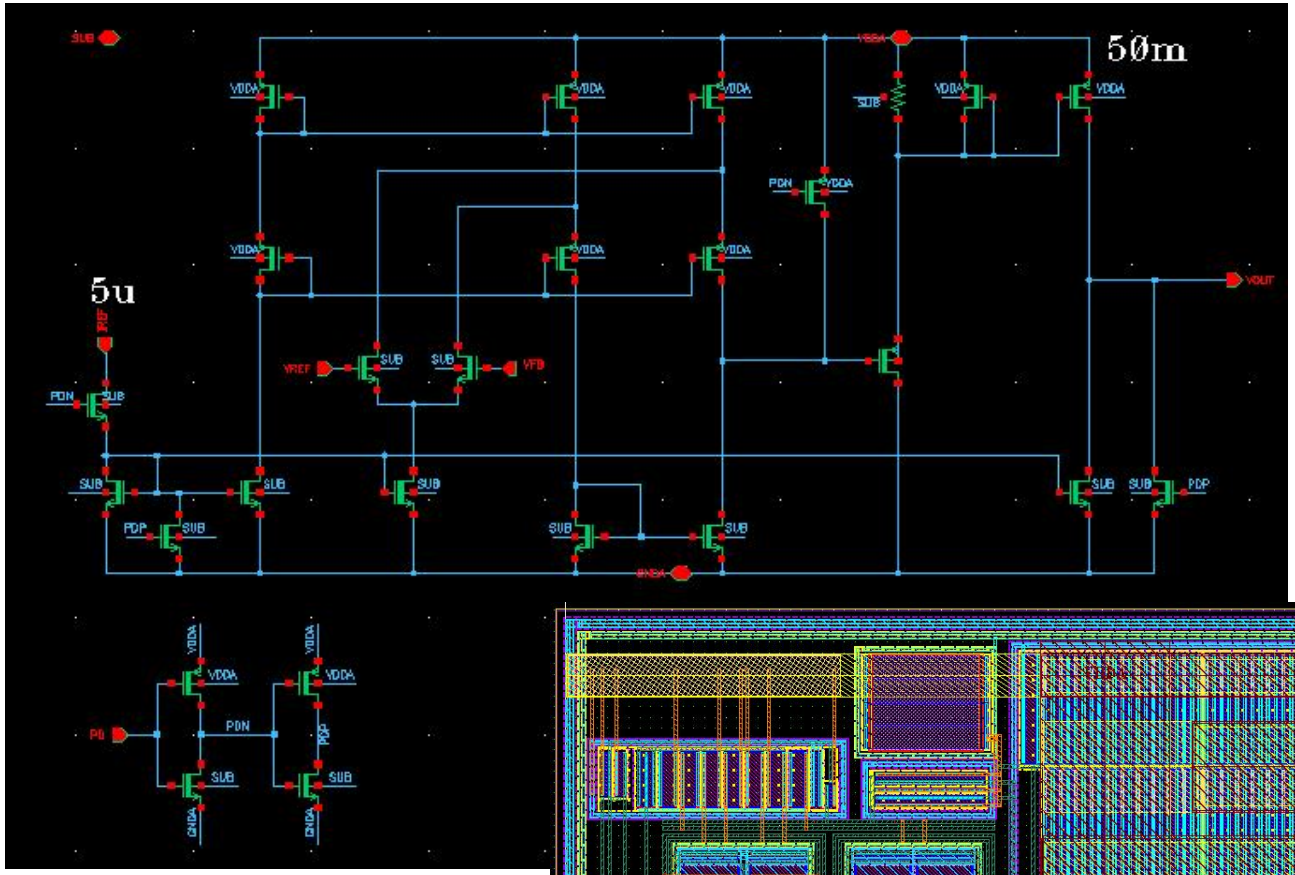

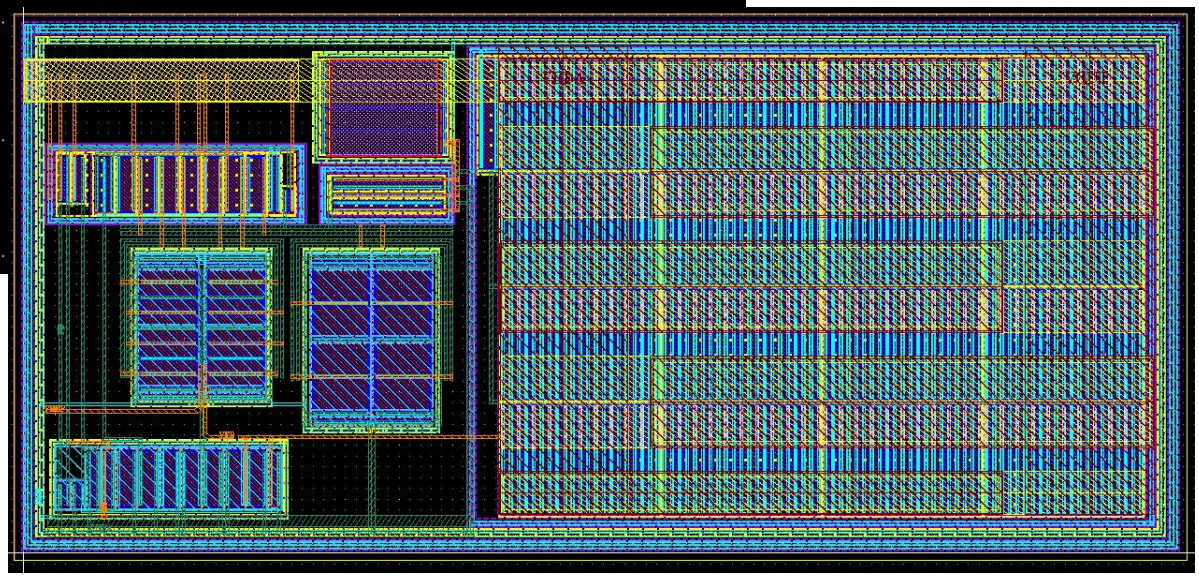

六、有源低通滤波器（LPF）仿真及版图设计

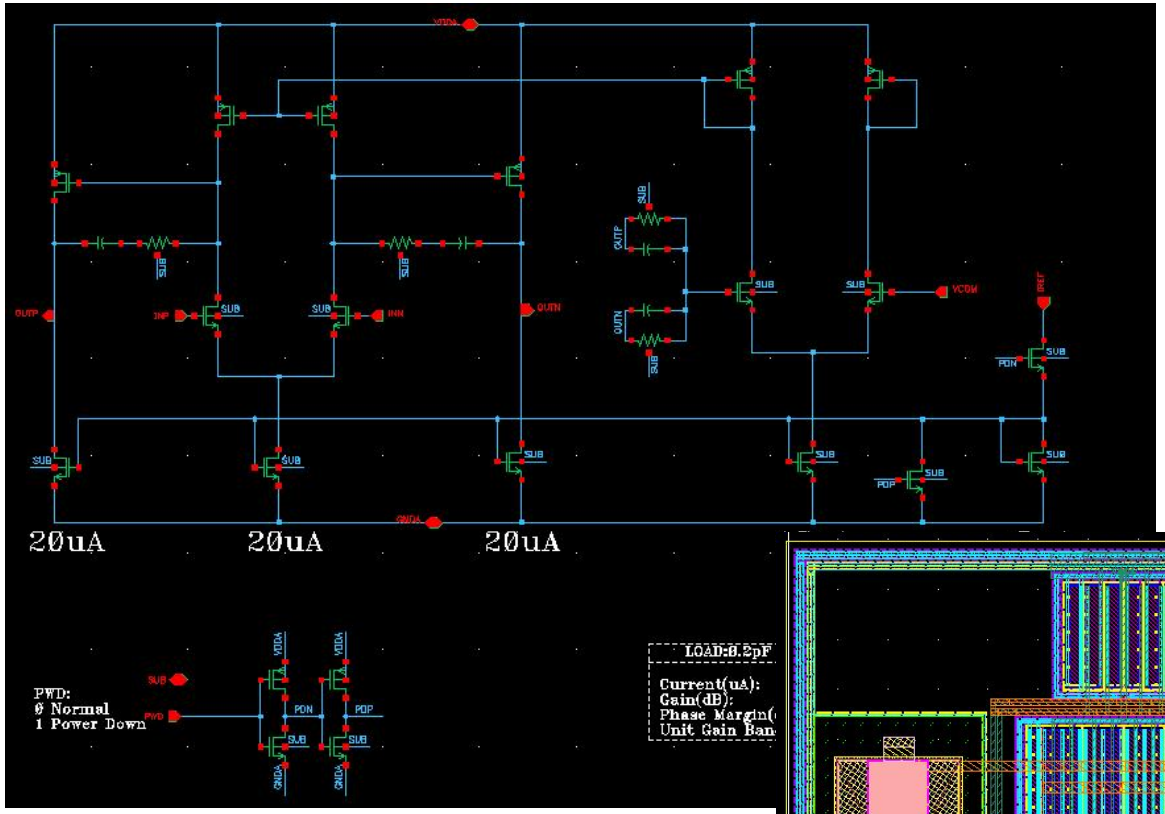

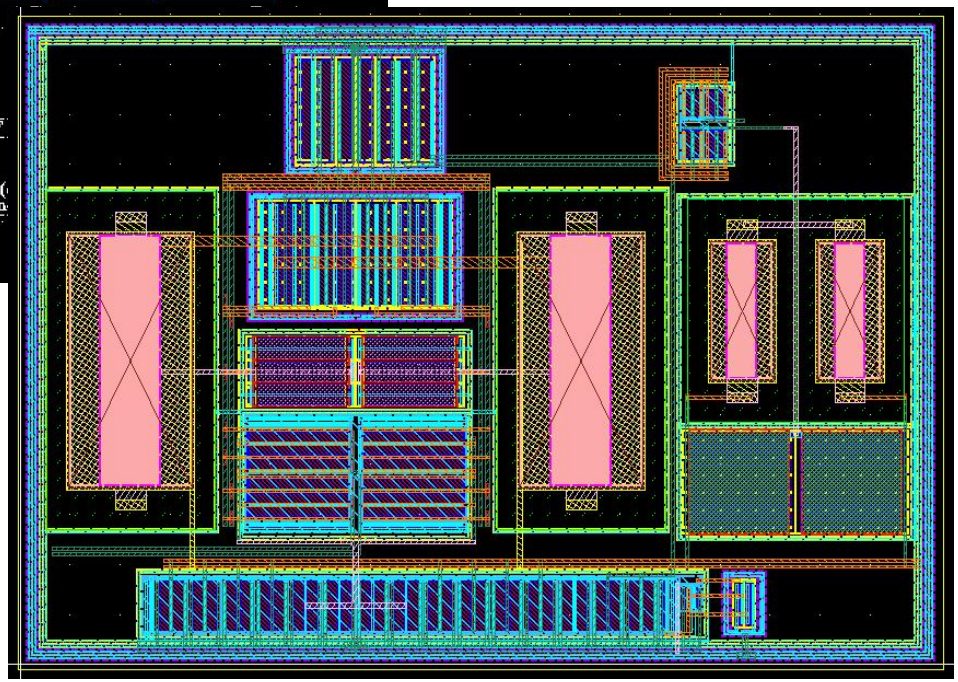

六、有源低通滤波器（LPF）仿真及版图设计